Fixed Arms, Fixed Legrest Models

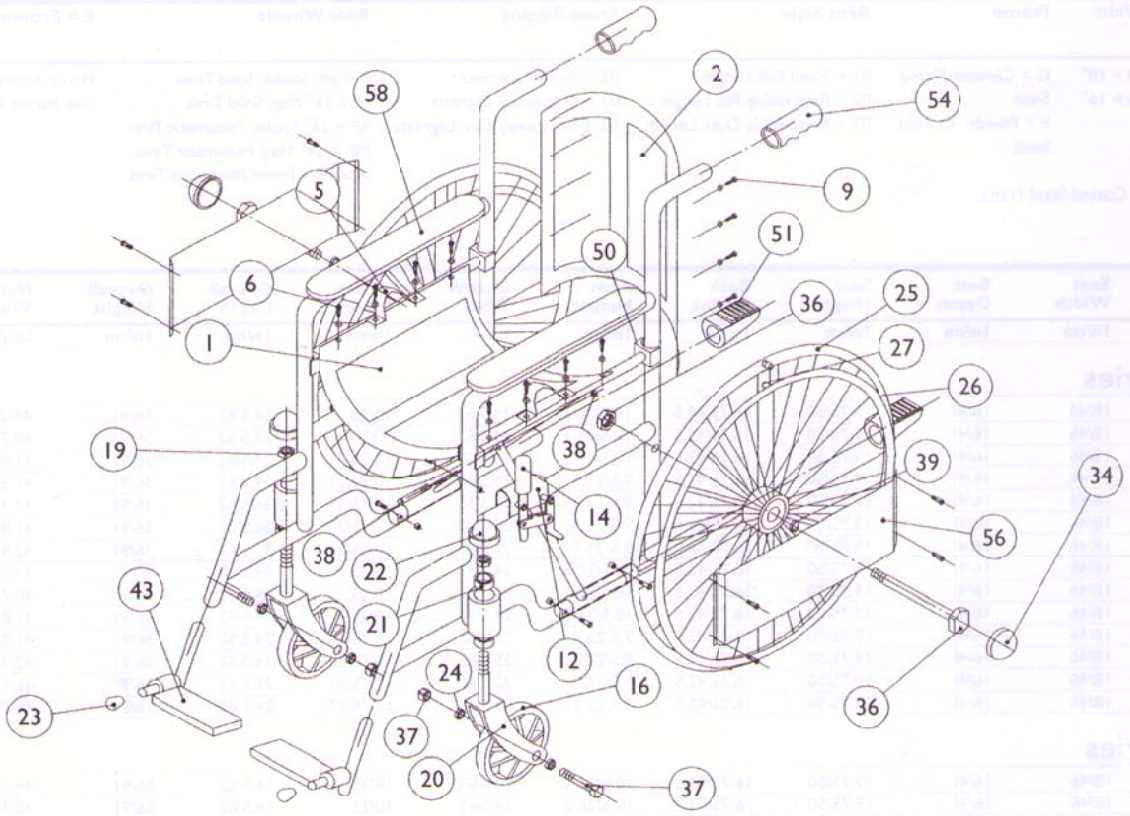
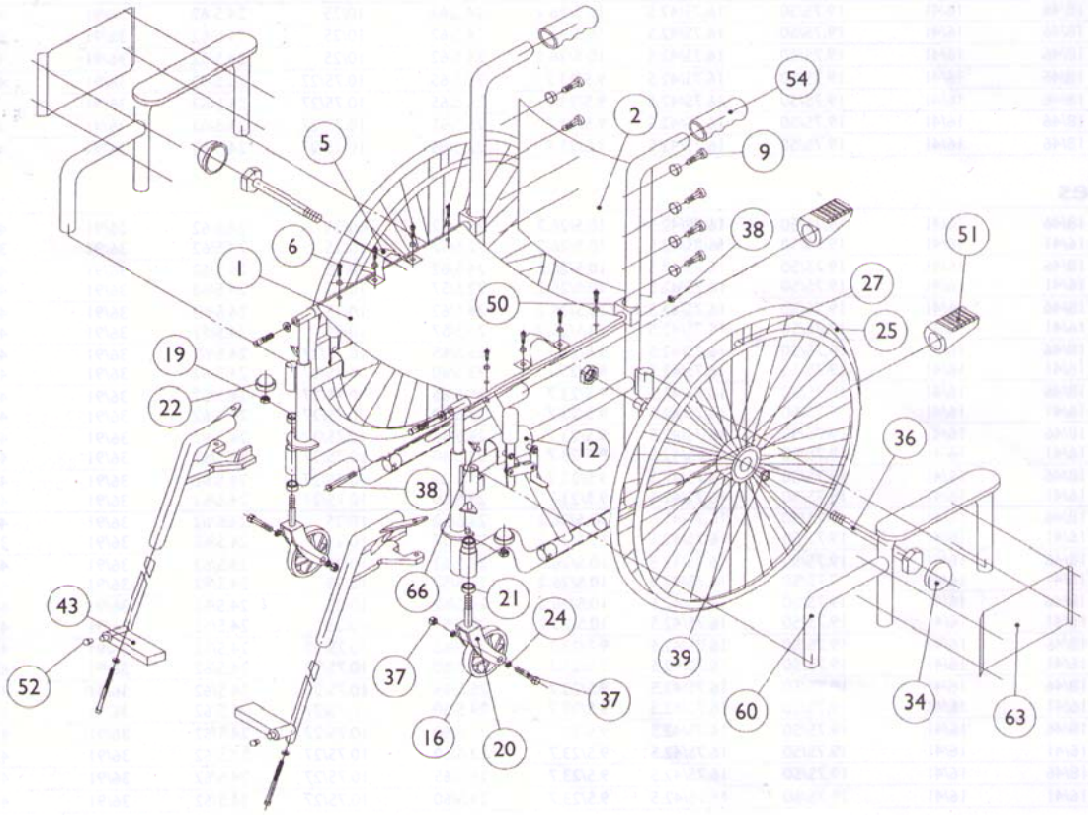
Detachable Arms, Swingaway and Elevating Legrest Models